**MICRO SWITCH**
FREEPORT, ILLINOIS, U.S.A.
A DIVISION OF HONEYWELL
FED. MFG. CODE 91929

# SWITCH-BASIC

CATALOG LISTING
**V3-19**

**CK-A1900**

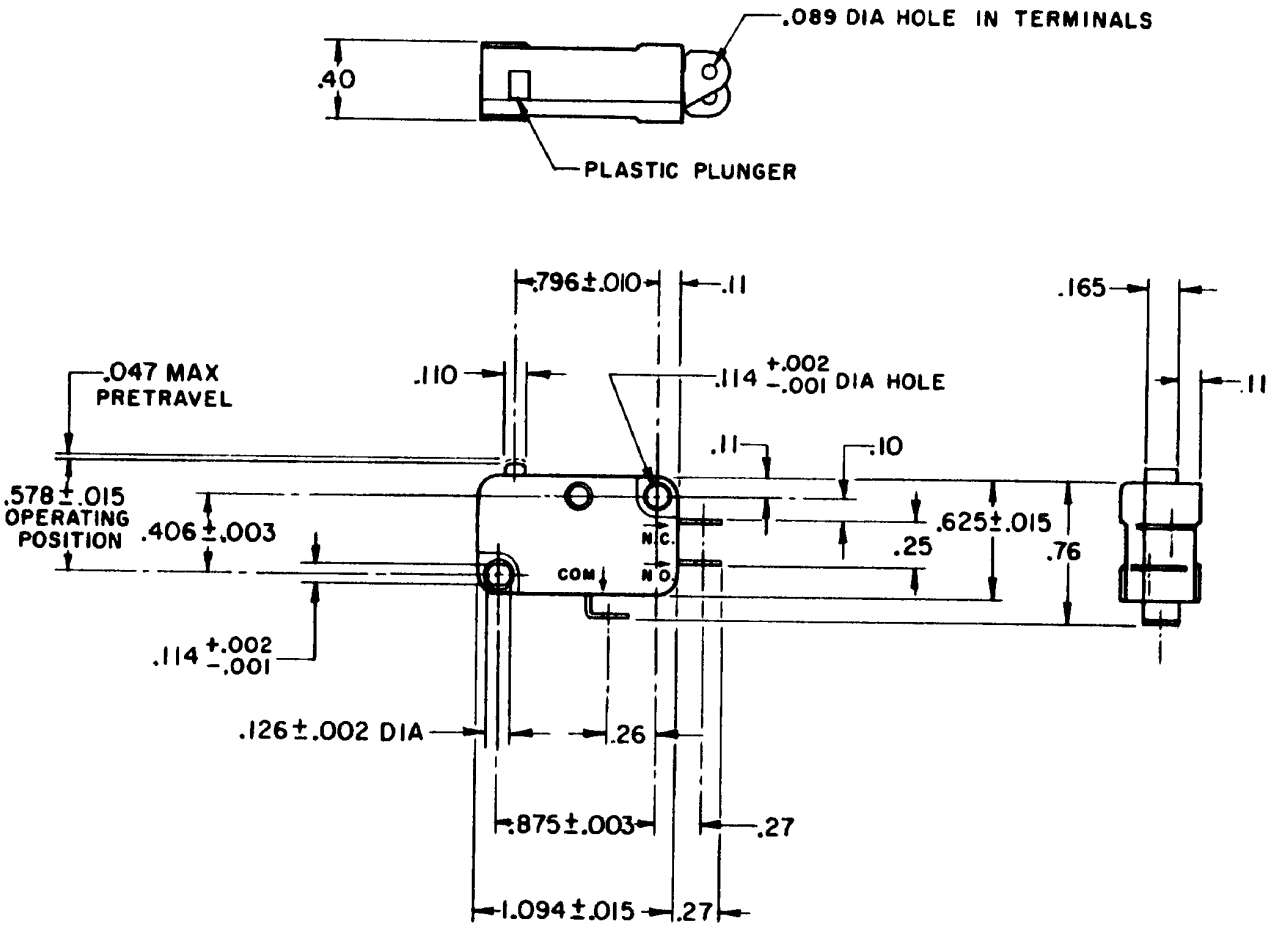


NOTE -
1 - TERMINALS ARE PLATED FOR SOLDERING

THIS DRAWING COVERS A PROPRIETARY ITEM AND IS THE PROPERTY OF MICRO SWITCH, A DIVISION OF HONEYWELL. THIS DRAWING IS NOT TO BE COPIED OR USED WITHOUT THE APPROVAL OF MICRO SWITCH.

## CHARACTERISTICS

| | |
|---|---|
| OPERATING FORCE | 6 - 14 OZ |
| RELEASE TRAVEL | .007 MIN |
| RELEASE FORCE | 4 OZ MIN |
| DIFFERENTIAL TRAVEL | .006 - .016 |
| OVERTRAVEL | .040 MIN |
| FREE POSITION | .625 MAX |

## ELECTRICAL DATA

CONTACT ARRANGEMENT
S P D T

L83
15.1A 1/2HP 125 OR 250 VAC
1/2A 125 VDC, 1/4A 250 VDC
5A 125 VAC "L"

SCALE FULL
DO NOT SCALE PRINT

UNLESS OTHERWISE NOTED
DIMENSIONS ARE IN INCHES
TOLERANCES ARE:

| | | |
|---|---|---|
| ONE PLACE | (.0) | ±.030 |
| TWO PLACE | (.00) | ±.015 |
| THREE PLACE | (.000) | ±.005 |
| ANGLES | | ± |

WEIGHT .016 LB

V3-19
DRAWING NUMBER
ISSUE 12
REPLACES
RELEASE NO.
CHECK
REVISIONS
A C020189 MBF 12 MAY 65
B C021900 DWC 6 JAN 67
C C031509 RER 22 JAN 73
D CO 50087 SRA 1 OCT 85
E C074635 KDR 7 MAY 93
DRAWN MBF 12 MAY 65
FO-50378