PART NUMBER
SEE CHART

REVISION HISTORY					
REV	DOCUMENT	DESCRIPTION	CHG'D BY	DATE	APPROVED
A	0114483	RELEASED	SBH	2014-10-08	J. PEIYUAN
B	0116303	REVISED PER ECO	SBH	2014-11-28	J. PEIYUAN

ZM1	##	X	##	X /3\	##	X OR *** OR BLANK

SWITCH TYPE

ZM1	SERIES SUBMINIATURE

CURRENT RATING

10	0.1A 125/250VAC
15	0.1A 125/250VAC
50	3A 125/250VAC
55	3A 125/250VAC
60	6A 125/250VAC
90	10.1A 125/250VAC
95	16.1A 125/250VAC

OPERATING FORCE (AT PIN PLUNGER)

B	70gf /5\
D	95gf /5\
C	150gf /6\
G	355gf /7\

TERMINAL TYPE

10	SOLDER
20	PCB (STRAIGHT)
50	PCB (RIGHT SIDE)
60	PCB (LEFT SIDE)
70	LONG SOLDER (2.8 X 0.6mm) [.110" X .024"]
99	SPECIAL /2\

ACTUATOR TYPE

A	PIN PLUNGER
B	SHORT STRAIGHT LEVER 16.7mm [.66"] LENGTH
C	STANDARD STRAIGHT LEVER 18.7mm [.74"] LENGTH
D	STRAIGHT LEVER 24.8mm [.98"] LENGTH
E	STANDARD SIMULATED ROLLER LEVER R2.75mm, 18.0mm [.71"] LENGTH
F	ROLLER LEVER 16.6mm LENGTH [.65"] WITH ∅4.8mm ROLLER
H	SMALL SIMULATED ROLLER LEVER R1.3mm, 17.9mm [.70"] LENGTH
J	STRAIGHT LEVER 55.2mm [2.17"] LENGTH
K	STRAIGHT LEVER 35.2mm [1.39"] LENGTH
L	L - SHAPED LEVER 31.5mm [1.24"] TOTAL LENGTH
M	LARGE SIMULATED ROLLER LEVER R2.45mm 21.1mm [.83"] LENGTH
S	SPECIAL /2\

CIRCUIT CODE

01	SPDT
03	SPST-NO
04	SPST-NC

SPECIAL DESIGNATOR

A SPECIAL DESIGNATOR CODE IS USED TO INDICATE SOME NON-STANDARD FEATURE SUCH AS A SPECIAL ACTUATOR, TERMINATION FEATURE ETC. REVIEW PRODUCT SPECIFICATION TO DETERMINE THE NATURE OF THE NON-STANDARD FEATURE. THIS CODE WILL CONSIST OF UP TO 3 ALPHANUMERIC CHARACTERS. A BLANK DESIGNATES NO DIFFERNECE FROM STANDARD LISTING.

THESE SPECIAL DESIGNATOR CODES ARE PREDEFINED

G	GOLD PLATED SILVER CONTACTS /8\

SPECIFICATIONS

MANUFACTURER SPECIFIED TEMPERATURE RATING		-40°C TO 125°C EXCEPT ZM115 & ZM155 (0°C TO 85°C)
SOLDERING BY HAND		≤ 5 SECONDS @ 350°C MAX
SOLDERING BATH		≤ 5 SECONDS @ 260°C MAX
RECOMMENDED FASTENER / MOUNTING TORQUE		M2 PAN HEAD SCREWS TORQUED TO 1.6Kg-cm (1.4 IN-LB)
SWITCH RESISTANCE (INITIAL)		300 mΩ MAX. AS MEASURED USING 4-WIRE VOLTAGE DROP METHOD @ 6VDC & 100mA (SWITCH MAY BE ACTUATED UP TO 3 TIMES PRIOR TO MEASUREMENT)
DIELECTRIC STRENGTH		500 VAC (RMS) FOR 1 MINUTE, LEAKAGE CURRENT ≤0.5mA BETWEEN OPEN CONTACTS
		1500 VAC (RMS) FOR 1 MINUTE, LEAKAGE CURRENT ≤0.5mA BETWEEN LIVE-PARTS AND GROUND BETWEEN LIVE-PARTS AND DEAD METAL PARTS
INSULATION RESISTANCE		MIN. 100 MΩ (500 VDC FOR 1 MINUTE)
UL / cUL ELECTRICAL RATING (PER UL 61058-1, FILE E12252)	ZM110	0.1RA 125/250VAC (TEMP 125°C) 10,000 CYCLES MIN
	ZM115	0.1RA 125/250VAC (TEMP 85°C) 10,000 CYCLES MIN
	ZM150	3RA 125/250VAC (TEMP 125°C) 10,000 CYCLES MIN
	ZM155	3RA 125/250VAC (TEMP 85°C) 10,000 CYCLES MIN
	ZM160	6RA 125/250VAC (TEMP 125°C) 10,000 CYCLES MIN
	ZM190	10.1GPA 125/250VAC (TEMP 125°C) 10,000 CYCLES MIN
	ZM195	16.1GPA 125/250VAC (TEMP 55°C) 10,000 CYCLES MIN
ENEC (PER IEC 61058-1) ELECTRICAL RATING	ZM110	0.1A 125/250VAC, 40T125 μ 1E4
	ZM115	0.1A 125/250VAC, T85 μ 1E4
	ZM150	3A 125/250VAC, 40T125 μ 1E4
	ZM155	3A 125/250VAC, T85 μ 1E4
	ZM160	6A 125/250VAC, 40T125 μ 1E4 6(2)A 125/250VAC, 40T125 μ 1E4
	ZM190	10.1A 125/250VAC, 40T125 μ 1E4 6(2)A 125/250VAC, 40T125 μ 1E4
	ZM195	16.1(4)A 125/250VAC, 40T85 μ 1E4 16.1A 125/250VAC, 40T125 μ 1E4 6(3)A 125/250VAC, 40T125 μ 1E4
CQC (PER GB 15092.1) ELECTRICAL RATING	ZM110	0.1A 125/250VAC, 40T125 μ 1E4
	ZM115	0.1A 125/250VAC, T85 μ 1E4
	ZM150	3A 125/250VAC, 40T125 μ 1E4
	ZM155	3A 125/250VAC, T85 μ 1E4
	ZM160	6A 125/250VAC, 40T125 μ 1E4 6(2)A 125/250VAC, 40T125 μ 1E4
	ZM190	10.1A 125/250VAC, 40T125 μ 1E4 6(2)A 125/250VAC, 40T125 μ 1E4
	ZM195	16.1A 125/250VAC, 40T125 μ 1E4 6(3)A 125/250VAC, 40T125 μ 1E4
ELECTRICAL OPERATING FREQUENCY		30 CYCLES/MINUTE MAX EXCEPT ZM190 & ZM195(15 CYCLES/MINUTE MAX FOR EACH)
MECHANICAL ENDURANCE (120 CYCLES/MINUTE MAX)		ZM110/115/150/155/160(B/C/D FORCE): MIN 1,000,000 CYCLES
		ZM190(C FORCE): MIN 1,000,000 CYCLES
		ZM190(G FORCE) & ZM195: MIN 50,000 CYCLES
MATERIALS		
CASE/COVER		ZM110/ZM115/ZM150/ZM155/ZM160: PBT
		ZM190/ZM195: PA
CONTACTS		SILVER ALLOY
TERMINALS/FINISH		ZM115/ZM155: BRASS (NO, NC) BRASS / SILVER PLATED (COM)
		ZM110/ZM150/ZM160/ZM190/ZM195: BRASS / SILVER PLATED
PLUNGER		PA
ACTUATORS		STAINLESS STEEL

NOTES:

1 - NOMENCLATURE IS FOR IDENTIFICATION PURPOSES ONLY, NOT ALL COMBINATIONS ARE POSSIBLE. VARIATIONS NOT SET UP WOULD REQUIRE MINIMUM VOLUMES TO ESTABLISH.

/2\ - TERMINAL TYPE "99" OR ACTUATOR TYPE "S" DESIGNATES A SPECIAL AND THEREFORE REQUIRES A SPECIAL DESIGNATOR LETTER AT THE END OF THE LISTING.

/3\ - LEVER LENGTH DIMENSION IS MEASURED AS FOLLOWS: STRAIGHT LEVER FROM THE CENTER LINE OF THE PIVOT TO THE END OF THE LEVER ROLLER LEVER OR SIMULATED ROLLER LEVER FROM THE CENTER LINE OF THE PIVOT TO THE CENTERLINE OF THE ROLLER LEVER. SEE SHEET 4 FOR MORE DETAILS.

4 - INSTALLATION INSTRUCTIONS PK 80173 TO BE INCLUDED WITH EACH BOX OF SWITCHES.

/5\ - NOT AVAILABLE WITH "90 & 95" CURRENT RATING OPTIONS.

/6\ - NOT AVAILABLE WITH "95" CURRENT RATING OPTION.

/7\ - NOT AVAILABLE WITH "10,15,50,55 & 60" CURRENT RATING OPTIONS.

/8\ - ONLY AVAILABLE WITH "15" & "55" CURRENT RATING OPTIONS.

UNLESS OTHERWISE SPECIFIED
DIMENSIONS ARE IN MM
DECIMAL TOL NO PLACE ··· ±0.5
1 PLACE ··· ±0.3
2 PLACE ··· ±0.15
3 PLACE ··· ±0.05
ANGULAR TOL - ±2° CHAMFER - ±5°

THIRD ANGLE PROJECTION

MATERIAL

FINISH

APPLICABLE DOCUMENTS: ASME Y14.100-2004
ASME Y14.5-2009

COMPUTER GENERATED DRAWING: PRO/ENGINEER

Honeywell

TITLE

SWITCH - BASIC

SIZE	CAGE CODE	DWG NO	TYPE	REV
A1	-	ZM1 SERIES CHART 1	1	B

SCALE NONE | REF WT: | SHEET 1 of 5

RELEASE DATE	2014-10-08
DRW: R. KRISHNAN	2014-09-05
RDE: J. PEIYUAN	2014-10-08
QA: C. HARRY	2014-10-08
CHK: H. CHANDRA	2014-10-08

HONEYWELL CONFIDENTIAL
THIS DOCUMENT CONTAINS PROPRIETARY INFORMATION AND SUCH INFORMATION MAY NOT BE DISCLOSED TO OTHERS FOR ANY PURPOSE, NOR USED FOR MANUFACTURING PURPOSE'S WITHOUT WRITTEN PERMISSION FROM HONEYWELL

PART NUMBER
SEE CHART

MOUNTING DIMENSIONS

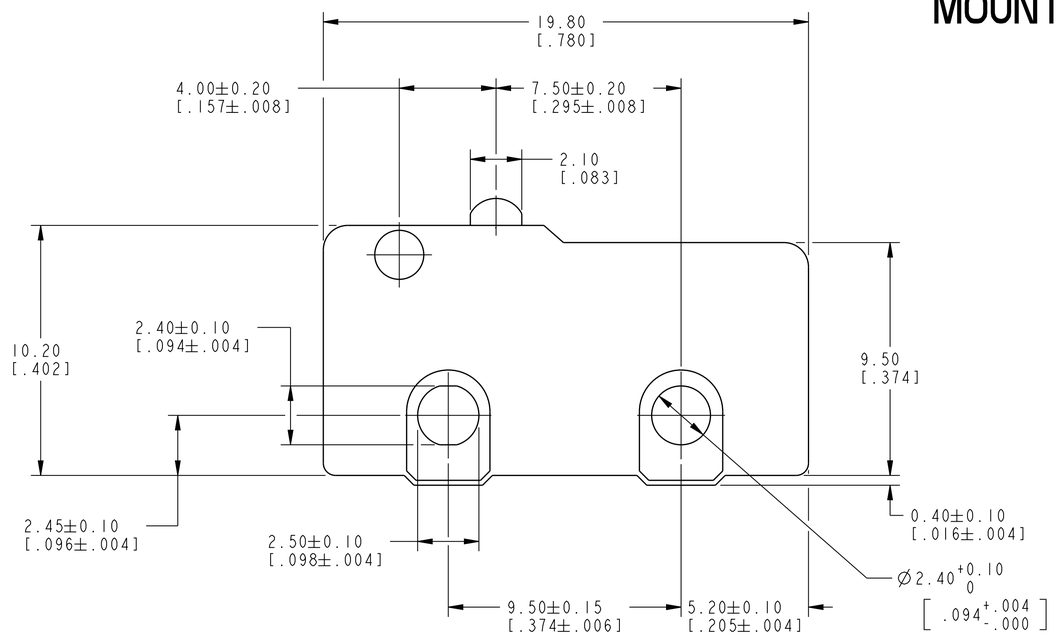

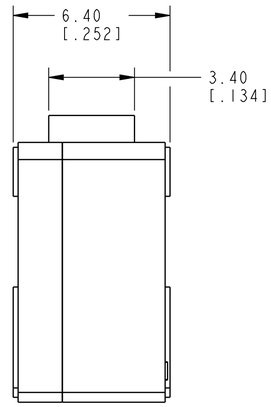

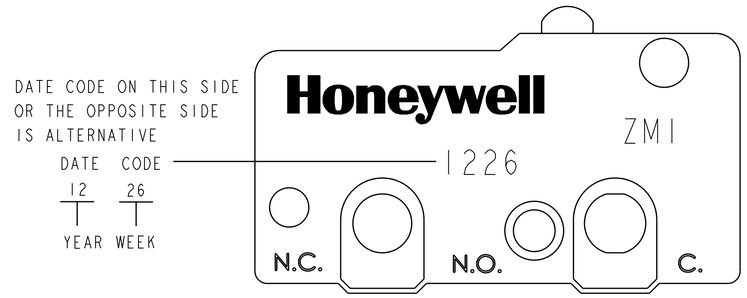

COO (COUNTRY OF ORIGIN)
CHINA: MADE IN CHINA
TAIWAN: MADE IN TAIWAN

ZM115

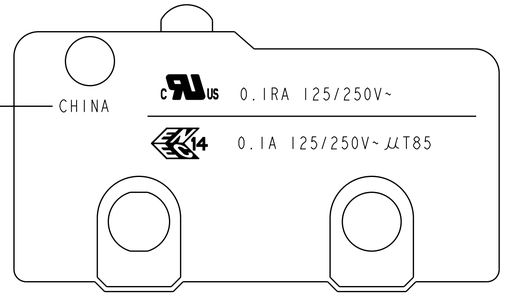

ZM155

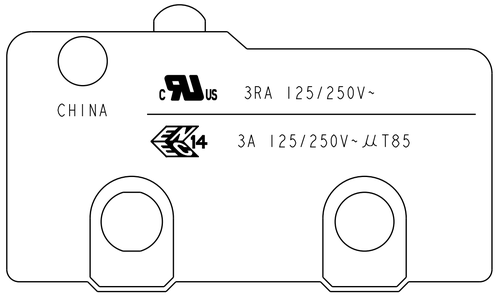

ZM110

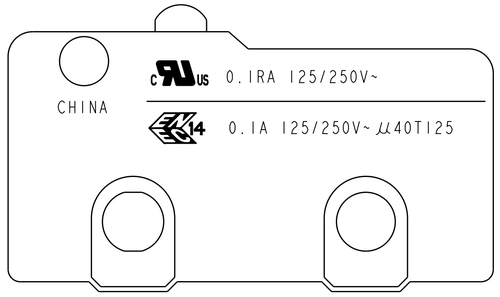

ZM150

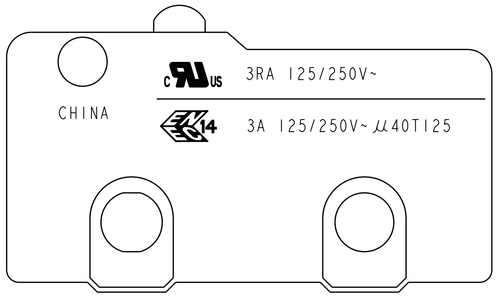

ZM160

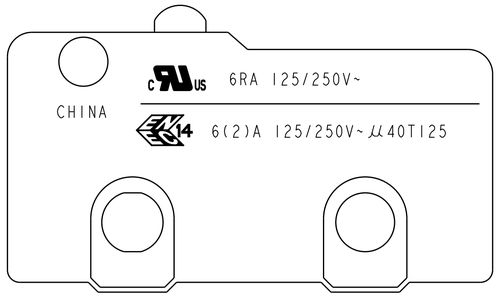

ZM190

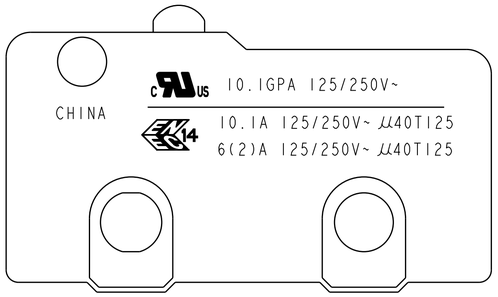

ZM195

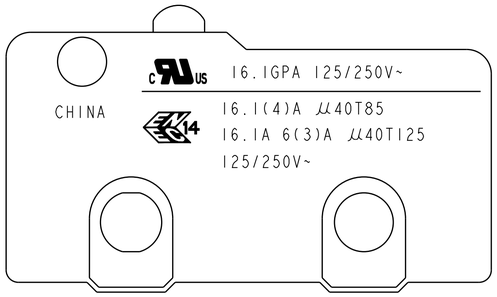

NOTE:
1 - UNLESS OTHERWISE SPECIFIED, A TOLERANCE OF ±0.4mm APPLIES TO ALL DIMENSIONS

Honeywell				
TITLE SWITCH - BASIC				
SIZE A1	CAGE CODE -	DWG NO ZM1 SERIES CHART 1	TYPE 1	REV B
SCALE 8:1		REF WT:	SHEET 2 of 5	

PART NUMBER
SEE CHART

TERMINAL TYPES

TYPE 10 - STANDARD SOLDER

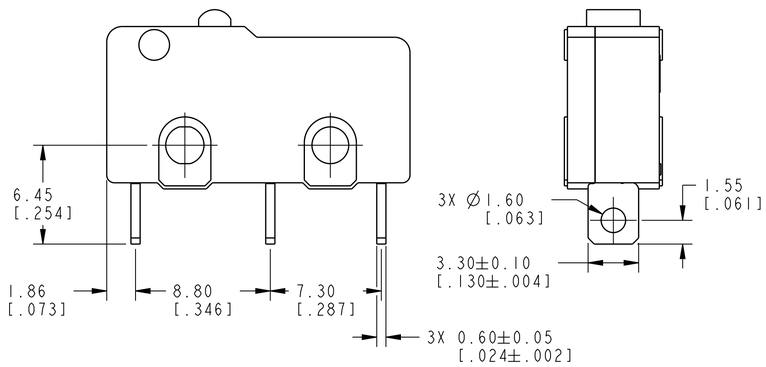

TYPE 20 - STRAIGHT PCB

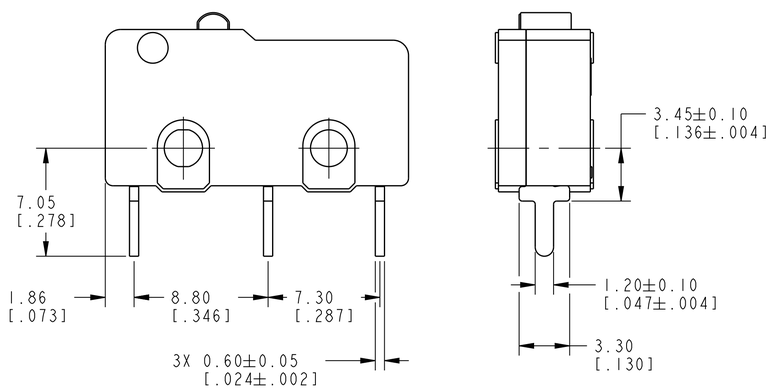

TYPE 50 - RIGHT PCB

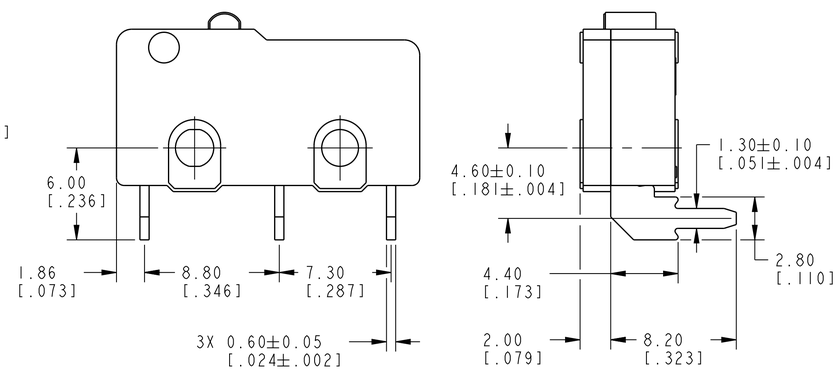

TYPE 60 - LEFT PCB

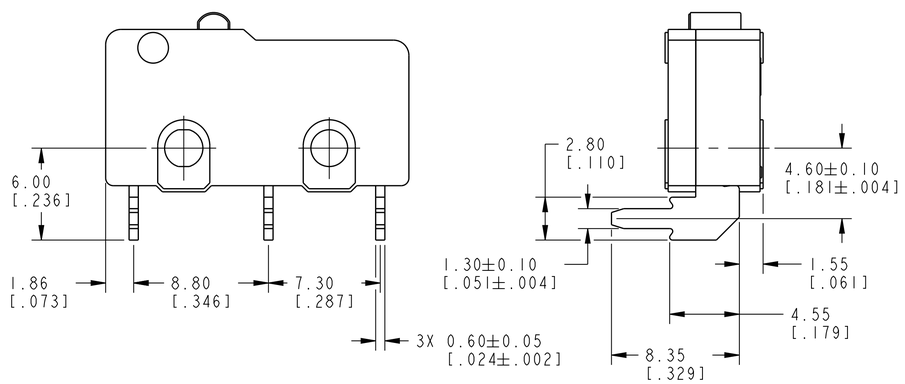

TYPE 70 - LONG SOLDER

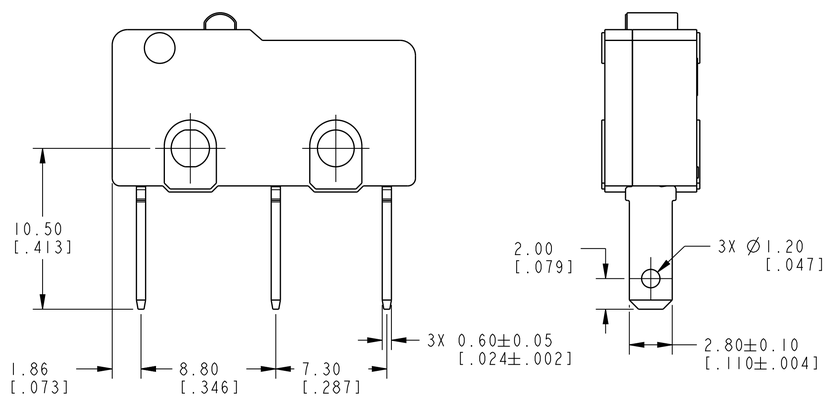

NOTE:
1 - UNLESS OTHERWISE SPECIFIED, A TOLERANCE OF ±0.4mm APPLIES TO ALL DIMENSIONS

Honeywell				
TITLE SWITCH - BASIC				
SIZE A1	CAGE CODE -	DWG NO ZM1 SERIES CHART 1	TYPE 1	REV B
SCALE 5:1		REF WT:	SHEET 3 of 5	

PART NUMBER
SEE CHART

ACTUATOR TYPES

ALL ACTUATORS EXCEPT
TYPE A AND F ARE 4.05±0.05mm WIDE

TYPE A

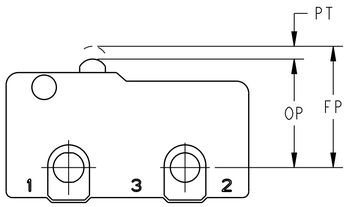

TYPE B

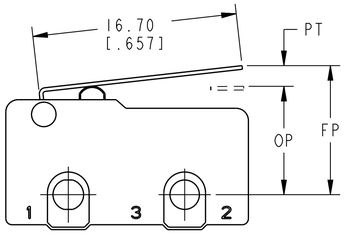

TYPE C

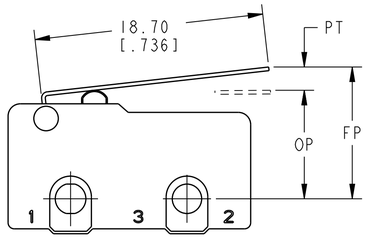

TYPE D

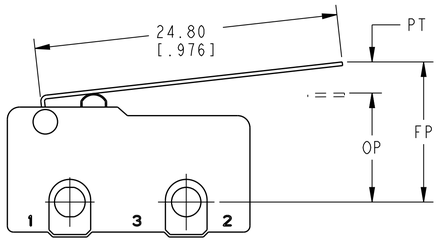

TYPE E

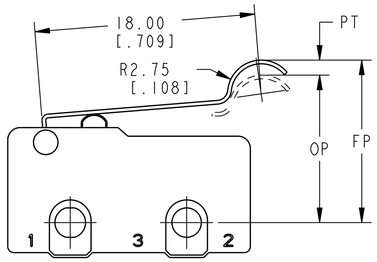

TYPE F

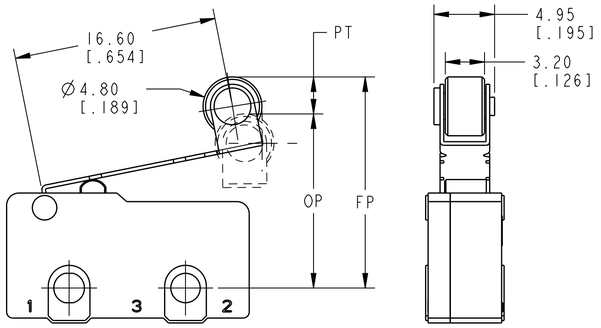

TYPE H

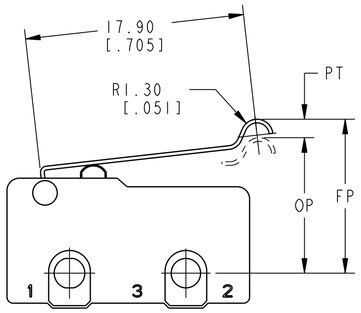

TYPE J

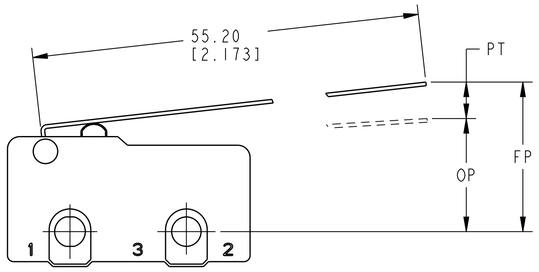

TYPE K

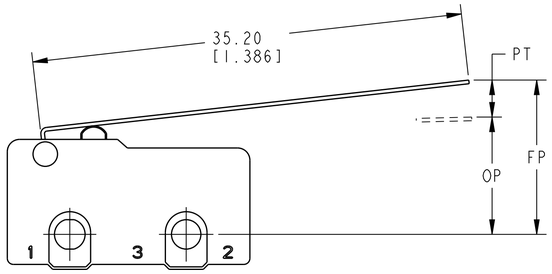

TYPE L

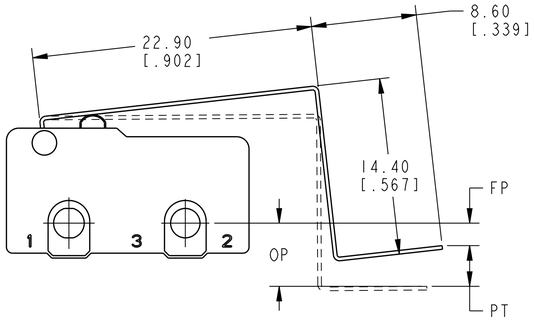

TYPE M

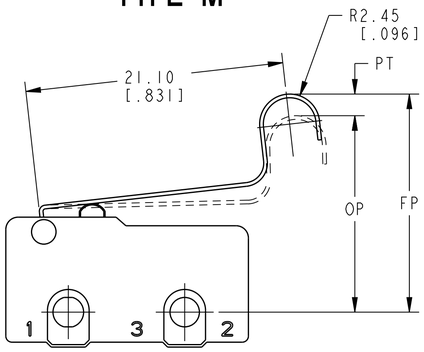

OPERATE POINT REFERENCES FOR PCB TERMINALS

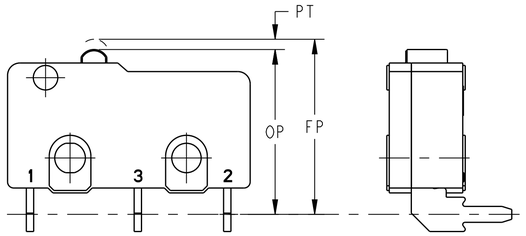

TERMINAL TYPE 50/60

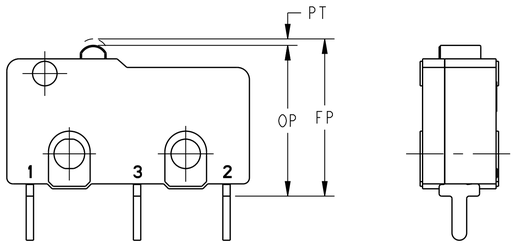

TERMINAL TYPE 20

NOTES:
1 - UNLESS OTHERWISE SPECIFIED, A TOLERANCE OF ±0.4mm APPLIES TO ALL DIMENSIONS
2 - ALL LEVER THICKNESS 0.3±0.03mm

Honeywell				
TITLE SWITCH - BASIC				
SIZE A1	CAGE CODE -	DWG NO ZM1 SERIES CHART 1	TYPE 1	REV B
SCALE 4:1		REF WT:	SHEET 4 of 5	

PART NUMBER
SEE CHART

MAXIMUM OPERATING FORCE (GRAMS)		OPERATING FORCE CODE				MAXIMUM PRETRAVEL (mm)		MINIMUM OVERTRAVEL (mm)		MAXIMUM DIFFERENTIAL TRAVEL (mm)		MAXIMUM FREE POSITION(mm)			OPERATING POSITION(mm)					
												FROM MOUNTING HOLE	FROM 20 TERMINAL BASE	FROM 50/60 TERMINAL CENTRE LINE	FROM MOUNTING HOLE		FROM 20 TERMINAL BASE		FROM 50/60 TERMINAL CENTRE LINE	
		gf				FORCE		FORCE		FORCE		B/D/C/G FORCE			FORCE		FORCE		FORCE	
		B	D	C	G	B/D/C	G	B/D/C	G	B/D/C	G				B/D/C	G	B/D/C	G	B/D/C	G
A	PIN PLUNGER	70	95	150	355	1.10		0.40		0.20		9.35	12.85	13.95	8.55±0.3		12.05±0.3		13.15±0.3	
B	16.7mm STRAIGHT LEVER	24	28	50	118	3.60	4.63	0.60	0.53	0.80	1.45	11.75	15.25	16.35	8.95±0.8	8.55±1.1	12.45±0.8	12.05±1.1	13.55±0.8	13.15±1.1
C	18.7mm STRAIGHT LEVER	24	25	45	107	4.03	5.29	0.67	0.48	0.90	1.67	12.09	15.59	16.69	8.95±0.9	8.55±1.3	12.45±0.9	12.05±1.3	13.55±0.9	13.15±1.3
D	24.8mm STRAIGHT LEVER	13	20	34	87	5.35	7.47	0.89	0.18	1.19	2.40	13.11	16.61	17.71	8.95±1.5	8.15±1.8	12.45±1.5	11.65±1.8	13.55±1.5	12.75±1.8
E	18.0mm STD. SIM. ROLLER LEVER	20	30	42	111	5.20	5.20	0.60	0.40	0.90	1.60	15.95	19.45	20.55	12.25±1.5	11.55±2.0	15.75±1.5	15.05±2.0	16.85±1.5	16.15±2.0
F	16.6mm ROLLER LEVER	20	28	50	117	3.80	4.60	0.60	0.55	0.80	1.44	17.65	21.15	22.25	14.65±0.8	14.25±1.1	18.15±0.8	17.75±1.1	19.25±0.8	18.85±1.1
H	17.9mm SMALL SIM. ROLLER LEVER	20	26	47	111	3.86	5.02	0.64	0.51	0.86	1.58	13.81	17.31	18.41	10.85±0.9	10.45±1.2	14.35±0.9	13.95±1.2	15.45±0.9	15.05±1.2
J	55.2mm STRAIGHT LEVER	7	12	15	NA	10.45	-	1.00	-	2.90	-	19.25	22.75	23.85	8.95±3.0	-	12.45±3.0	-	13.55±3.0	-
K	35.2mm STRAIGHT LEVER	NA	16	25	55	8.60	11.20	1.50	0.50	1.80	4.10	15.55	19.05	20.15	8.95±2.0	7.05±2.7	12.45±2.0	10.55±2.7	13.55±2.0	11.65±2.7
L	31.5mm L-SHAPED LEVER	NA	17	25	NA	6.00	-	NA	-	1.90	-	2.55	6.05	7.15	-5.15±3.0	-	-1.65±3.0	-	-0.55±3.0	-
M	21.1mm LARGE SIM. ROLLER LEVER	NA	23	42	97	5.70	6.12	1.00	0.40	1.00	1.95	20.35	23.85	24.95	16.15±1.5	15.15±1.5	19.65±1.5	18.65±1.5	20.75±1.5	19.75±1.5

MINIMUM RELEASE FORCE (GRAMS)					
A	PIN PLUNGER	5	10	25	100
B	16.7mm STRAIGHT LEVER	1	1	6	20
C	18.7mm STRAIGHT LEVER	1	1	5	17
D	24.8mm STRAIGHT LEVER	<1	1	2	11
E	18.0mm STD. SIM. ROLLER LEVER	<1	1	6	18
F	16.6mm ROLLER LEVER	<1	1	6	21
H	17.9mm SMALL SIM. ROLLER LEVER	<1	1	5	19
J	55.2mm STRAIGHT LEVER	<1	1	1	NA
K	35.2mm STRAIGHT LEVER	NA	1	1	8
L	31.5mm L-SHAPED LEVER	NA	1	1	NA
M	21.1mm LARGE SIM. ROLLER LEVER	NA	1	2	15

Honeywell

TITLE SWITCH - BASIC

SIZE	CAGE CODE	DWG NO	TYPE	REV
A1	-	ZM1 SERIES CHART 1	1	B
SCALE NONE		REF WT:	SHEET 5 of 5	