SAFRAN	SINGLE-POLE CONTACTORS, MAKE ONLY 28.5 V.D.C., CONTINUOUS OPERATION, OPERATING TEMPERATURE: −50°+80°C −50°+125°C SERIES: 2500A0	CHAPTER CC DC CONTACTORS

APPROVED ON 25.4.1962
21.4.1962
29_05_1979

LETTER N° 34859STAé/AQ.E2 BNAé 6.571.520C
34730STAé/AQ.E2 6.571.530A
German. BWB FE 15_90_59_00 F83_79

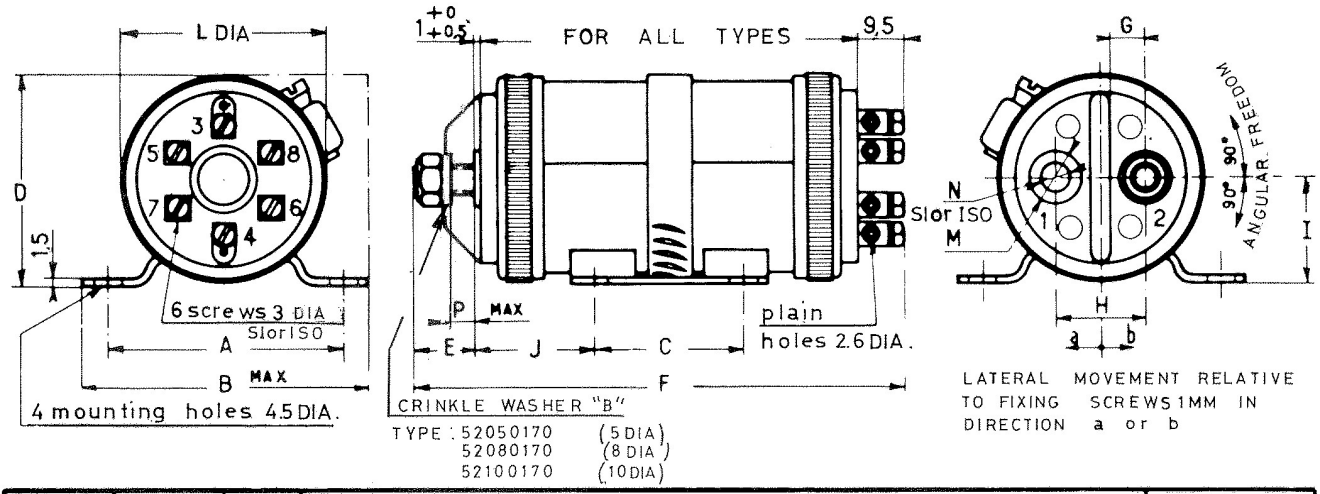

RATED CURRENT IN AMPS	MOUNTING	WEIGHT IN GM ±3%	MAIN DIMENSIONS IN MM. A ±0,3	B −0 −0,3	C ±0,3	D ±0,7	E	F ±0,7	G	H	I	J Nominal	J Adjustable from	J Adjustable to	L	M	N	P	CIRCUIT DIAGRAM
80	REDUCED	250	38	48	30	39,2	11	86	6,75	18	20	19	16	21	38,5	9	5	3,5	
	STANDARD		48	58															
125	REDUCED	297	38	48	30	39,2	14	101	6,75	18	20	24,5	16	33	38,5	9	5	6	
	STANDARD		50	60	45	45,2					26	17	14,5	19,5					
200	REDUCED	530	55	65	35	47	17	120	8,25	21,5	24	31	24	38	46	13	8	6	
	STANDARD		50	60	45	49					26	26	19	33					
320	REDUCED	670	60	70	40	52,5	17	123	9	24	27	31	24	38	51	13	8	6	
	STANDARD		70	80	45	60					34,5	28,5	19						
500	REDUCED	800	60	70	40	60,5	19,5	127	10,5	27	31	32	25	39	59	16	10	7	
	STANDARD		70	80	45	65					35,5	29,5	25,5	33,5					

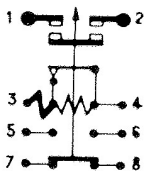

GENERAL CHARACTERISTICS

- DEFINITION : Electro magnetic device for the closing and opening of an electrical D.C. circuit. The main moving contact has only one rest position corresponding to the power circuit opening.
- DESCRIPTION : The unit is contained in a cylindrical metal housing which can be moved and orientated relative to its mounting base. Insulating moulding plates at each end carry: at one end the power terminals at the other end the terminals to the auxiliary switch and the control coil.
- ALTITUDE : Max. operational altitude : 25 000 m.
- ENVIRONMENTAL SPECIFICATIONS : Acceleration 15 g. on all axes
  Shock 50 g.
- Equipment meets tropical standards requirements.
- ELECTRICAL CONNECTIONS : Steel power terminals (threaded studs) accepting bus bars or crimped lugs for standard cables (see table overleaf)
  - Auxiliary terminals accepting crimped lugs(for max. cable section of 3.1 sq.mm.) or end fittings (for max. cable section of 1.91 sq.mm).

REVISIONS									
0	10	11	12						

MANUFACTURED BY
SAFRAN ELECTRICAL AND POWER
7, rue des Longs Quartiers – 93108 MONTREUIL Cedex

"ECE" OWNS THE COPYRIGHT OF THIS DOCUMENT, WHICH MUST NOT BE REPRODUCED OR COMMUNICATED EVEN IN PART TO A THIRD PARTY WITHOUT PERMISSION IN WRITING FROM THE OWNERS

RATED CURRENT IN AMPS	MANUFACT.	TERMINAL LUGS AVAILABLE - TERMINAL CONNECTIONS 1-2 CABLE C/S AREAS IN SQ MM.								RECOMMENDED MOUNTING TORQUE (Nm)	
		0,68-0,93	1,34	1,91	3,1 - 5,3	8,9	13,4	21,8	41,8		
80	SOURIAU	18.50	14.50	14.50	10.50	8,50	59.113			3 DIA.	> 0,49 < 0,68
125	A.M.P	31.884	31.884	31.900	35.109	322.128	322.050			5 DIA.	> 2,64 < 2,94
200	SOURIAU					8.80	6.80	55.049		8 DIA.	> 6,86 < 9,12
	A.M.P	31.893	31.893	31.905	35.111	322.003	322.006				
320	SOURIAU					8.80	6.80	4.80	54.765	10 DIA.	> 11,13 < 15,20
	A.M.P	31.893	31.893	31.905	35.114	322.003	322.006	322.010			
500	SOURIAU					8.100	6.100	4.100	1.100		
	A.M.P				130.207						

ELECTRICAL CHARACTERISTICS

CONTACT CHARACTERISTICS								COIL CHARACTERISTICS					
POWER CONTACTS 30V. D.C. MAXIMUM					AUXILIARY CHANGE-OVER CONTACTS 30 D.C. MAX.			OPERATION AT + 20°C				OPERATING TIMES	
RATED CURRENT In	LIFE AT In L/R = 5/1000	VOLTAGE DROP AT RATED CURRENT	RUPTURE CAPACITY 10 TIMES	RATED CURRENT AT 115 V. A.C 400/1000 HZ.	RATED CURRENT RESISTIVE CIRCUIT	RATED CURRENT INDUCTIVE CIRCUIT	VOLTAGE DROPS AT RATED CURRENT	CLOSING VOLTAGE Vc (1)	OPENING VOLTAGE Vo	INRUSH CURRENT Ii (DURATION 5 MILLIS.)	COIL CURRENT AT 28,5 V.	CLOSING	OPENING
AMPS	CYCLES	MILLIVOLTS	AMPS	AMPS	AMPS	AMPS	MILLIVOLTS	VOLTS	VOLTS	AMPS	AMP ±10%	MILLISEC.	MILLISEC
80	80,000	≤ 120	800	30	5	3	≤ 50	≤ 18V. A + 80°C ≤ 21V. A+125°C	1,5 < Vo < 8	5 < Ii < 6	0,42	≤ 20	≤ 15
125			1250	40							0,35		
200			2000	60							0,35		
320			2500								0,35		
500			3500								0,35		

(1) THE TEMPERATURE CONDITIONS ARE THOSE OBTAINED AFTER ONE HOUR THERMAL STABILISATION WITH RATED CURRENT FLOWING THROUGH ALL CONTACTS.

NOTE: The correct functioning of the main contacts can be guaranteed only for a controlled current of at least 2 Amps.

TRANSIENT LOADS (OVERLOADS) AT AMBIENT TEMPERATURES OF: + 20° C AND + 80° C

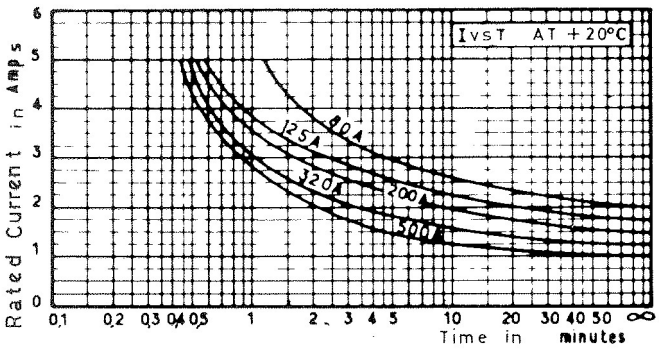

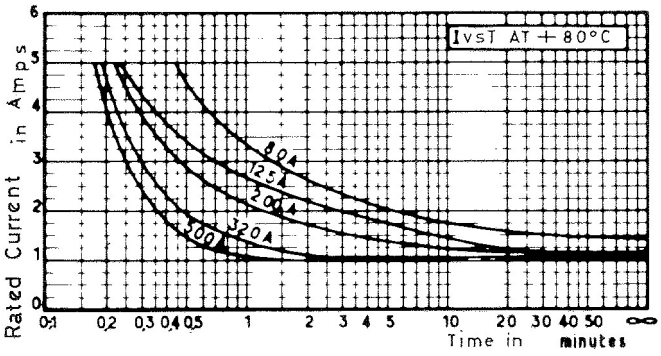

- QUALIFICATION SPECIFICATION: AIR 8456A
- ACCEPTANCE SPECIFICATION: AIR 8456

"ECE" OWNS THE COPYRIGHT OF THIS DOCUMENT, WHICH MUST NOT BE REPRODUCED OR COMMUNICATED EVEN IN PART TO A THIRD PARTY WITHOUT PERMISSION IN WRITING FROM THE OWNERS

ORDER GUIDE

RATING AMPS	MOUNTING ST = STANDARD RD = REDUCED	PITCH DIA. N	ORIGINAL VERSION: CONTACTOR WITH MOUNTING BASE (Marking on Nameplate) −50°+80°C	ORIGINAL VERSION: CONTACTOR WITH MOUNTING BASE (Marking on Nameplate) −50°+125°C	ORIGINAL VERSION: MOUNTING CLAMP	IDENTICAL FOR BOTH VERSIONS: CONTACTOR WITHOUT MOUNTING BASE NOR CLAMP (Marking on Nameplate)	IDENTICAL FOR BOTH VERSIONS: MOUNTING BASE	NEW VERSION: FLEXINOX MOUNTING CLAMP	NEW VERSION: CONTACTOR WITH MOUNTING BASE (Marking on Package only – Fictive Part No) −50°+80°C	NEW VERSION: CONTACTOR WITH MOUNTING BASE (Marking on Package only – Fictive Part No) −50°+125°C
80	RD	SI	2500A0		MINOX OA	2500A0N	2510_104-1	MH_025_045	2500A0Y1	
		ISO	2500A0MM			2500AMMN			2500A0MMY1	
	ST	SI	12500A0			12500A0N	1_2500_104_1		12500A0Y1	
		ISO	12500A0MM			12500AMMN			12500A0MMY1	
	RD	SI		2501A0		2501A0N	2510_104-1			2501A0Y1
		ISO		2501A0MM		2501AMMN				2501A0MMY1
125	RD	SI	2510A0			2510A0N	2510_104_1		2510A0Y1	
		ISO	2510A0MM			2510AMMN			2510A0MMY1	
	ST	SI	12510A0			12510A0N	1_2500 104_1		12510A0Y1	
		ISO	12510A0MM			12510AMMN			12510A0MMY1	
	RD	SI		2511A0		2511A0N	2510_104_1			2511A0Y1
		ISO		2511A0MM		2511AMMN				2511A0MMY1
200	RD	SI	2520_0		FLEXINOX MH_032_052	2520_0N	2520_107_1	MH_032_052	2520_0Y1	
		ISO	2520_0MM			2520MMN			2520_0MMY1	
	ST	SI	12520_0			12520_0N	1_2520_107		12520_0Y1	
		ISO	12520_0MM			12520MMN			12520_0MMY1	
	RD	SI		2521_0		2521_0N	2520_107_1			2521_0Y1
		ISO		2521_0MM		2521MMN				2521_0MMY1
320	RD	SI	2530_0			2530_0N	2530_104		2530_0Y1	
		ISO	2530_0MM			2530MMN			2530_0MMY1	
	ST	SI	12530_0			12530_0N	1_2530_104		12530_0Y1	
		ISO	12530_0MM			12530MMN			12530_0MMY1	
	RD	SI		2531_0		2531_0N	2530_104			2531_0Y1
		ISO		2531_0MM		2531MMN				2531_0MMY1
500	RD	SI	2540_0		FLEXINOX MH_047_067	2540_0N	2540_105	MH_047_067	2540_0Y1	
		ISO	2540_0MM			2540MMN			2540_0MMY1	
	ST	SI	12540_0			12540_0N	1_2540_105		12540_0Y1	
		ISO	12540_0MM			12540MMN			12540_0MMY1	

THESE UNITS ARE FITTED WITH AN ENGLISH WORDED NAMEPLATE

2500A0 3|3 "ECE" OWNS THE COPYRIGHT OF THIS DOCUMENT, WHICH MUST NOT BE REPRODUCED OR COMMUNICATED EVEN IN PART TO A THIRD PARTY WITHOUT PERMISSION IN WRITING FROM THE OWNERS